PARTS LIST

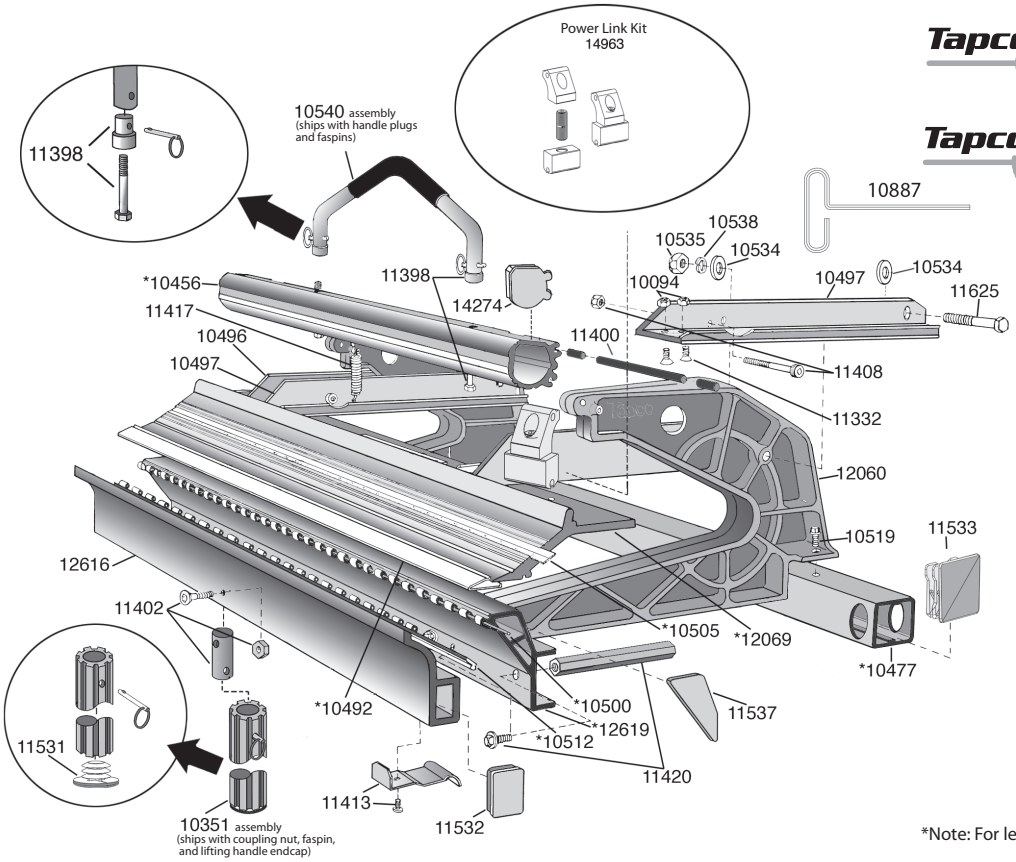

Tapco PRO19™

Tapco PRO14™

*Note: For length-specific parts, 10'6" (3.2m) Pro 14 parts numbers are shown in diagram.

Item #	Description
10094	¼ -20 Hex Flange Nut
10351	Lifting Handle Assembly
12615	8'6" Moving Hinge
12616	10'6" Moving Hinge
12617	12'6" Moving Hinge
12618	8'6" Fixed Hinge
12619	10'6" Fixed Hinge
12620	12'6" Fixed Hinge
10452	8'6" Locking Handle
10456	10'6" Locking Handle
10460	12'6" Locking Handle
12067	8'6" Locking Anvil
12069	10'6" Locking Anvil
12071	12'6" Locking Anvil
10491	8'6" Stainless Edge
10492	10'6" Stainless Edge
10493	12'6" Stainless Edge
10499	8'6" Hinge Pin
10500	10'6" Hinge Pin
10501	12'6" Hinge Pin
10504	12'6" Tape Measure
10505	10'6" Tape Measure
10506	8'6" Tape Measure
10511	8'6" Pro/Max Vinyl Strip
10512	10'6" Pro/Max Vinyl Strip
10513	12'6" Pro/Max Vinyl Strip
10519	¼ -20 x ¾" Hex Washer Head Screw
10534	3/8" Flat Washer
10535	3/8-16 Nylock Hex Nut
10538	3/8" Lock Washer

Item #	Description
10540	Hemming Handle Assembly
10887	T-Handle Hex Key
11332	Screw ¼ -20 x 7/8" Flat Head Screw
11397	¼" x 1¼" Faspin Kit (4)
11398	Hemming Handle Plug Kit (2) Hemming Handle Plug (2) 3/8-16 x 2 ¼" Bolt
11400	Locking Handle Kit (10) Pin (20) Keeper
11402	Pro Handle Plug Kit (2) ¼-20 x 1 ½" Flat Head Screw (2) Lifting Handle Plug (2) ¼-20 Nylock Hex Nut
11408	Bolt and Nut Kit (5) ¼-20 x 2 1/2" Bolt (5) ¼-20 Nylock Hex Nut
11413	Hinge Clip Kit (1) Hinge Clip (1) 10-24 ½" Phillips Pan Head Screw
11420	Coupling Nut Kit (2) Coupling Nut (2) 10-24 x ¾" Screw
11531	Lifting Handle Cap
11532	Moving Hinge Cap
11533	Back Rail Cap
14274	Locking Handle Cap
14963	Power Link Kit (6)
11536	Left Base Hinge Cap (not shown)
11537	Right Base Hinge Cap
11625	3/8-16 x 3 ¼" Hex Cap Bolt

Item #	Description
Pro 19 Specific Parts	
10333	8'6" Back Rail
10337	10'6" Back Rail
10341	12'6" Back Rail
10347	Left Pivot Arm
10348	Right Pivot Arm
12041	Pro 19 Parts Bag
12061	Pro 19 C Casting
Pro 14 Specific Parts	
12622	10'6" HD Fixed Hinge
10458	10'6" HD Locking Handle
10472	8'6" Back Rail
10477	10'6" Back Rail
10480	10'6" HD Back Rail
10482	12'6" Back Rail
10496	Left Pivot Arm
10497	Right Pivot Arm
11417	Pro Pivot Spring Kit (3) Roller/Pivot Spring (3) 10-24 ½ Phillips Pan Head Screw
12040	Pro 14 Parts Bag
12060	Pro 14 C Casting
12070	10'6" HD Locking Anvil

Tapco Integrated Tools Systems
Unit 32, Tokenspire Business Park, Hull Road, Woodmansey, Beverley, East Yorkshire, HU17 0TB
Tel: +44 (0)1482 880478 | Fax: +44 (0)1482 880678 | international@tapcoint.com | www.tapco-europe-tools.com

©2014 Tapco International Corporation

Parts sold in kits are not available for purchase individually.